These Installation Instructions are for general information only. Fastening requirements specific to Florida are presented in the Fastening Requirements document.

American Original™
BUILDING PRODUCTS LLC

Installation Instructions for Shake Siding Panels

American Original™
BUILDING PRODUCTS LLC

INSTALLATION INSTRUCTIONS FOR SHAKE SIDING PANELS

American Original Building Products, LLC. provides these instructions as installation guidelines. However, AOBP neither installs the siding panels nor has any control over the installation. It is the responsibility of the contractor and/or the installer to ensure AOBP siding panels are installed in accordance with these instructions and any applicable building codes. AOBP assumes no liability for improper installation and/or personal injury and/or property damage resulting from improper use or installation.

These installation instructions should not be construed as the only possible way to install this siding. Field conditions may dictate different methods. It is the responsibility of the siding installer to determine the best methods to use. Reference Building Codes for additional requirements.

1. PRODUCT OVERVIEW - *AOBP offers four styles of shake siding panels.*

1.1.1 *Traditional Shake*

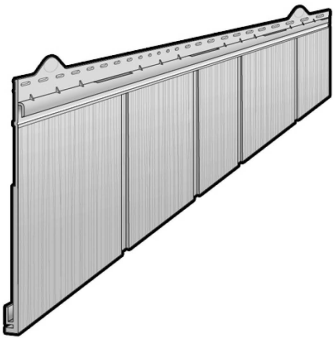

1.1.2 *Hand-Split Shake*

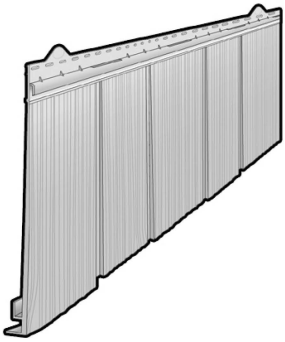

1.1.3 *Cape Cod Shake*

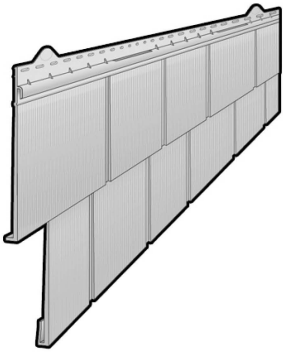

1.1.4 *Scallop Shake*

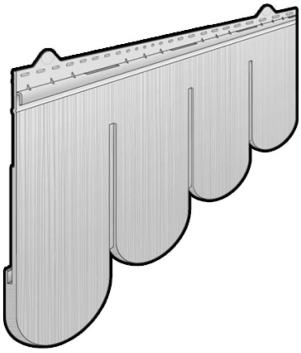

2. INSTALLATION GUIDELINES

AOBP siding panels will expand and contract with a change in temperature. It is important to compensate for this temperature effect during installation and assure siding and accessories are hung. The panel temperature markings on the end locks (see section 4.4) help assure the proper gap that will allow panel length changes due to temperature. Utilize the specially designed nail hem and make sure the panel "floats" on the wall by leaving a 1/16" gap between the fastener head and the panel. Do not flush nail, set or over drive fasteners. Do not nail panels in areas other than the nail hem slots provided on full panels. Fitting panels around between windows, corner posts or around openings requires a cut-back of approximately 1/4" to allow for panel expansion. Where the panel is cut along its length for openings or at the top of a wall, install a J channel or drill a 3/8" hole and nail in the center.

AOBP siding panels should only be installed on a smooth, flat surface. When residing older homes, either remove the old siding or install a sheathing board over the old siding to form a smooth, flat surface. It is essential you work over a smooth, flat, nailable wall surface (7/16" or thicker OSB board or plywood is recommended). If furring strips are used, the area between the furring strips must be filled to ensure a flat and level surface. If a foil-faced sheathing is used, the foil side should be facing in towards the house. AOBP recommends smooth galvanized roofing nails at least 1" long. Installation over foam will require longer fasteners to assure a penetration of at least 3/4" into a structural member (stud or nail base). Corner accessories may require toe-nailing to assure penetration to 7/16" in a nailable surface.

Installation of the shake panels is made easier by holding both hands near the ends of the panel and rocking it into place. The rock-to-lock method is accomplished by dropping the right side of the panel to an angle of about 45, engage the left side in the lock and pivot the panel into place assuring full engagement.

The AOBP packaging system incorporates palletized and wrapped shipments from the factory. The pallets are longer than many and require extended forks for movements. Pallets should not be stored more than 2 units high. The shake siding should be stored indoors and away from direct sources of heat and sunlight. Do not store in any location where the temperature may exceed 120 F or in closed unventilated areas where heat may build up. Storing product outside may result in damage. Store and transport full carton on a flat surface and support the entire length of the carton.

As with any vertical siding, you may have to complete an extra step to provide solid nailing points along the vertical edge of the wall. The need for this added step depends on the type of substrate used and the nature of the construction project. Open corners (sheathing does not need) or uneven walls may require furring strips to provide and adequate nail base.

This product is not designed for roof application. It is designed solely for installation on vertical surfaces. Panels must be installed with nails over a solid substrate with nail holding strength such as plywood, oriented strand board, or existing wood siding (minimum 7/16" thick). This product cannot be installed with staples.

3. FEATURES

3.1 Continuous top and bottom lock
All AOBP siding panels are manufactured with top and bottom continuous locks to insure the panels are tightly secured to each other.

3.2 Engineered nailing hem
The specially engineered nailing hem features right-sized nail slots designed to allow proper expansion and contraction of individual panels to accommodate for natural fluctuations in temperature.

3.3 Temperature markings
Temperature markings are included in each panel to designate the proper gap between panels during installation. (See section 4.4 for details)

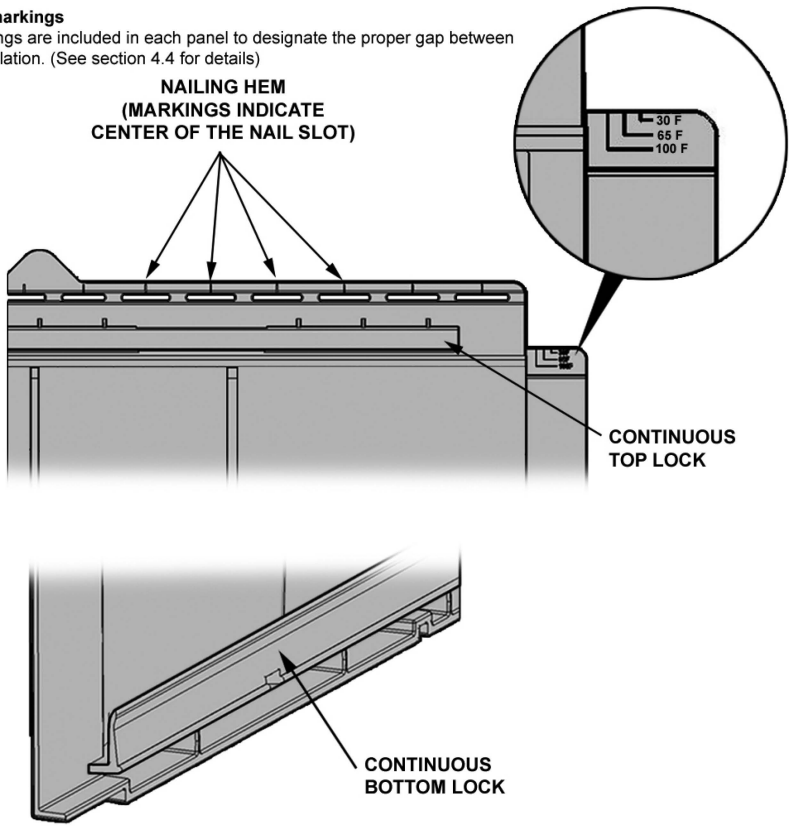

Figure 3.1 Product Features

4. ACCESSORIES REQUIRED FOR PROPER INSTALLATION

Standard siding accessories, with a minimum ¾ ″ pocket width (such as the J-Channel, inside and outside corner posts, window and door trim) can be used with AOBP siding panels.

4.1 Starter strip

The special shake starter strip is recommended for use with all four profiles.

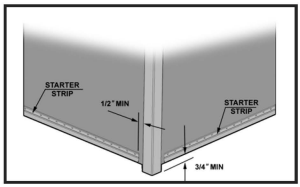

Figure 4.1 Starter Strip

5. APPLICATION TECHNIQUE

5.1 Tools Required

* Hammer
* Pencil
* Snips (Tin)
* Nail slot punch
* Chalk line
* Utility knife
* Tape measure
* Level

NOTE: ALWAYS USE SAFETY GOGGLES WHEN USING HAND OR POWER TOOLS.

5.2.1 Methods to cutting panels.
For ease of installation, AOBP recommends the use of a circular saw, with blade installed so blade is spinning backwards. Siding can be cut with snips or standard utility knife if needed.

5.2 Always build wall left to right.
All AOBP siding panels are designed to be installed left to right which is the industry standard. Right to left installation may be possible in certain circumstances.

Installation over various substrates.
NOTE: For applications requiring engineering evaluation of wind load parameters, please contact AOBP at: American Original Building Products, LLC.
1000 Arlington Circle
Akron, Ohio 44306-0670
330-786-3000
email: info@americanoriginalsiding.com

Nail based sheathings.
It is recommended to work over a smooth, flat, wall surface.
Nails should penetrate a nail base 7/16" minimum.

Non-nail based sheathings.
For any non-nailable sheathing, AOBP recommends that all nails be driven through the sheathing and into the structural framing a minimum of 3/4".

5.3 Start rows with random lengths.
Care should be taken to not use the same length starter panel on the same wall. This will minimize the chance of creating a pattern. Cut panels should only be used to start and terminate a course. The minimum panel length should be 16″.

5.4 Setting the panel gap for temperature.
It is important to have the proper amount of gap because the siding panels will expand and contract with a change in temperature. Each siding panel has temperature markings indicating the proper panel spacing during installation.
It is important to set the panel gap based on panel temperature and not air temperature.

Air Temperature Range in °F	Position on temperature marking gauge
91°F and above	On the 100° F line
90°F – 76°F	Between 65°F and the 100°F lines
75°F – 56°F	On the 65°F line
55°F – 41°F	Between the 30°F and the 65°F lines
40° and below	On the 30°F line.

Figure 5.1 Panel Gapping Guide

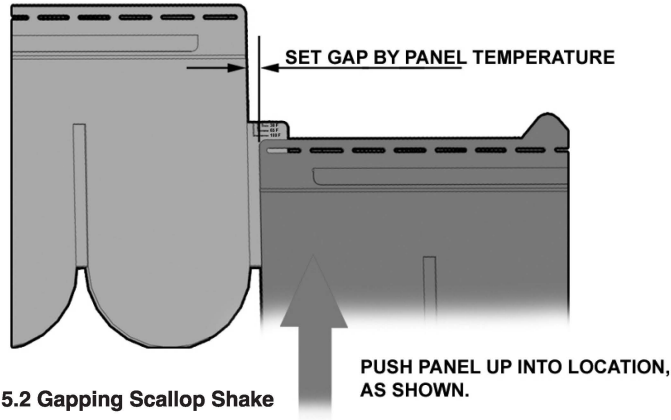

Figure 5.2 Gapping Scallop Shake

5.5 Installing the initial course.

5.5.1 Starter strip
Install starter strips at the lowest point of the structure making sure they are level.
Leave a minimum of ½″ gap between the starter strips and any type of trim components (J-channel, inside or outside corner post.)

5.5.2 Inside and outside corner posts
Corner post and corner trim (J-channel) must be installed before any panels are nailed into position. Corner posts must extend a minimum of 3/4″ below the starter strip.

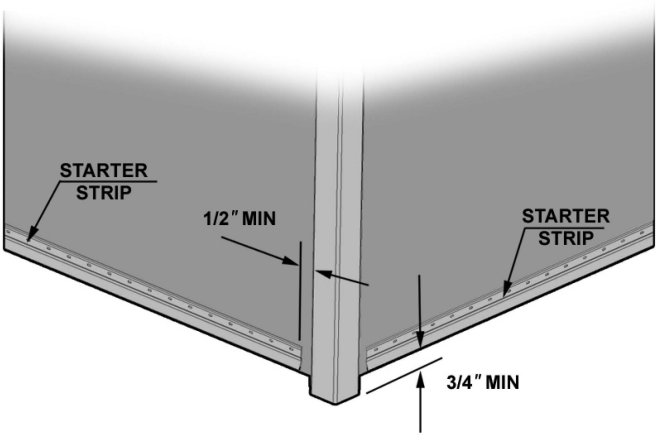

NOTE: The Hand-Split Shake corner post should be 1¼″ min. below starter strip.

Figure 5.3 Starter Strip Placement

5.5 .3 Starting the first course

To install the first siding panel cut a straight edge on the side that is to be inserted into the corner trim channel. Hook the bottom lock into the starter strip and slide the panel into the corner trim channel. Keep the siding panel a minimum of ¼″ away from the inside edge of the corner trim channel. This allows for expansion of the siding panel. Use a small torpedo level to make sure the starting piece is level on the wall.

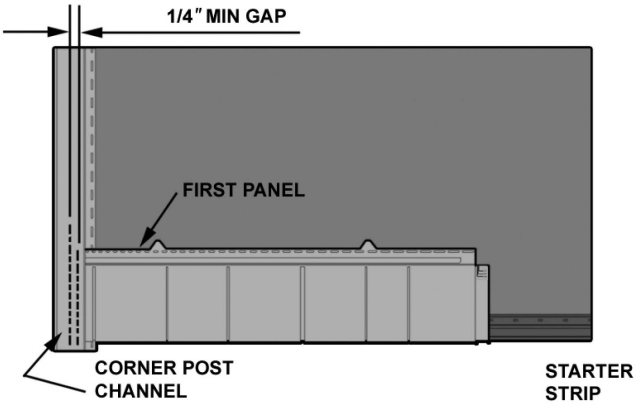

Figure 5.3 First Panel Installation

Nail the siding panel to the structural member (stud or nail base) closest to the center of the panel and working out to the ends. Nail spacing cannot exceed 16″. All nails located in the nailing hem must be driven until there is a 1/16″ gap between the nail head and the siding panel. This allows for expansion and contraction of the siding panel.
Nails must be located in the center of nailing slots.

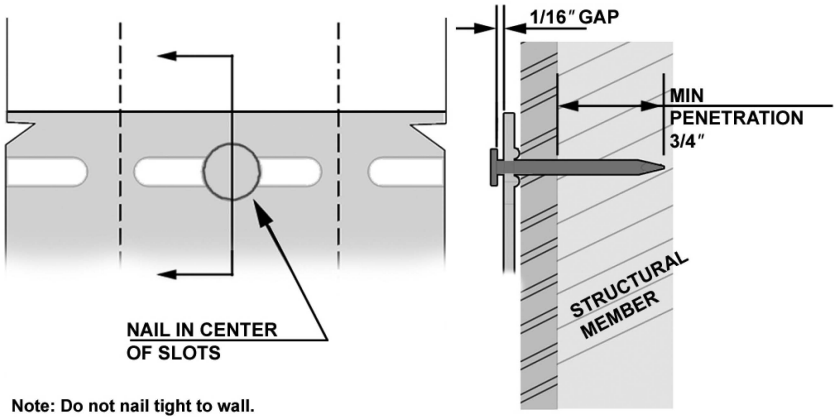

Note: Do not nail tight to wall.

AOBP siding panels must be nailed at a minimum frequency of 16″. A 3/4″ minimum nail penetration into a structural member (stud or nail base) is required. Install the second panel by hooking onto the starter strip and overlapping the male side lock (Temperature markings section 4.4).
Position the second panel to the required gap for expansion and nail into location. Start by nailing the panel in the center area and working out.

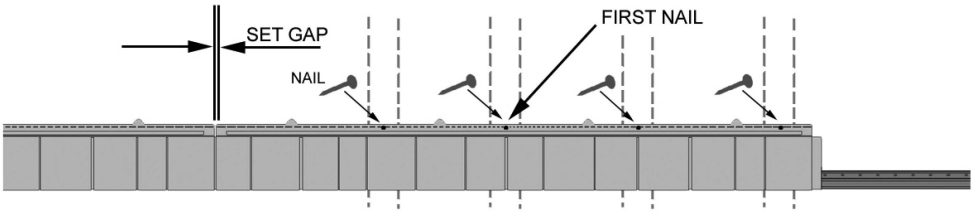

Continue with this process until the first course is completed remembering to leave a minimum ¼″ gap for the last panel into the corner trim channel.

4.7 Installing the second and subsequent courses
Start each subsequent course with random length siding panels to prevent a repetitive joint or grain pattern.When applying your first piece make sure the continuous bottom lock is fully engaged with the continuous top lock of the previous course.

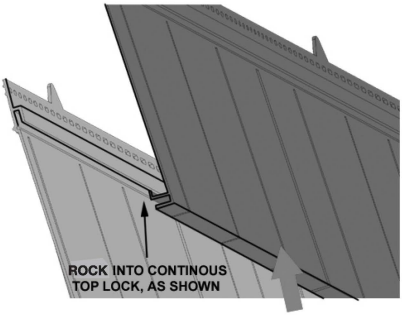

Make sure a minimum of 6″ of the continuous top lock is remaining exposed for the next panel to lock onto.

Figure 5.6 Locking Mechanism

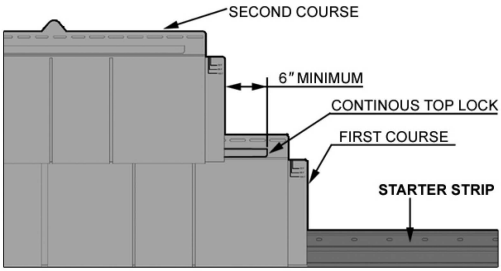

Position the next panel for the required gap for expansion and nail into place.

Figure 5.7 Illustration of two courses installed

5.8 Installation TIP

A feature of the AOBP shake siding is the long single course which reduces scrap and installation time. Installation of these long shake panels is made easier by holding both hands near the ends of the panel and rocking it into place. The rock-to-lock method is accomplished by dropping the right side of the panel to an angle of about 45, engage the left side in the lock and pivot the panel into place assuring full engagement.

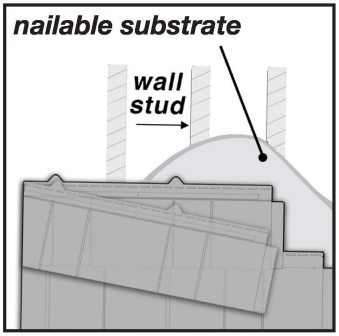

Figure 5.8 Rock the Panel to Lock

5.9 When installing scallop
Each next course should have the center of the scallop aligned with the groove between scallops of the course below

Figure 5.9 Scallop Alignment

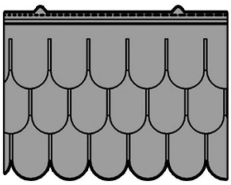

5.10 Mansard Roofs
With a 45/12 slope or greater are acceptable applications when installed over a weather barrier rated for the application.

6. TRIMMING

6.1 Installing final course
Use J-channel with AccuClip or 2 piece crown molding or channel system to finish the final coures.
Measure from the inside of the trim channel down to the bottom edge of the continuous top lock minus ¼″.
This is the height dimension for the final course.

Figure 6.1 Measuring the Final Course

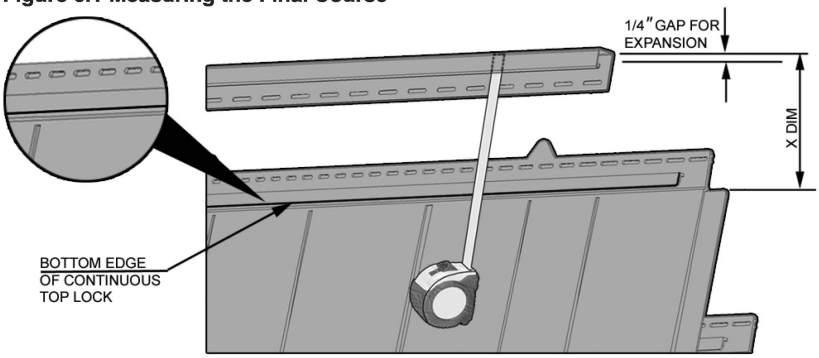

Lay the panel face down and measure from the bottom lock up. Cut the panel to the desired height.

Figure 6.2 Cutting the Final Course

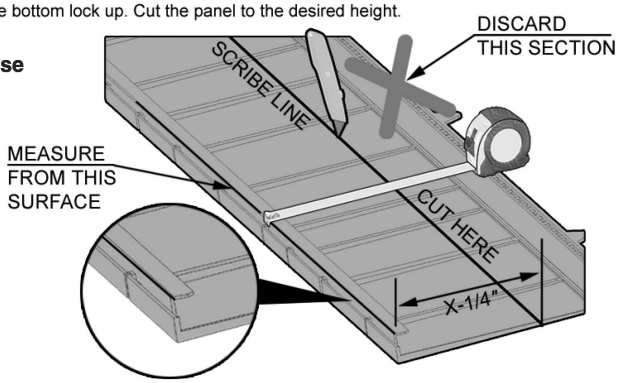

Figure 6.3 Installing Final Course

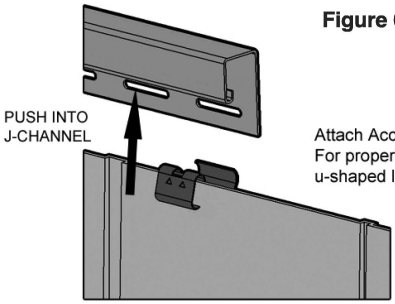

Attach AccuClips to siding panel every 16" and lock panel into place.
For proper installation, AccuClip should lock with
u-shaped leg at inside of j-channel face.

If using a 2 piece channel system, apply channel receiver. Create nail slots every 16" to cut panel and fasten to wall.
Snap on j-channel face piece.

6.2 Trimming around openings
Measure and cut panels for around openings allowing ¼″ for expansion. Follow the same instructions as in section 5.1 for measuring and installing around openings. Use AccuClip to secure panel where nail hem was removed.

6.3 Trimming gables
It is recommended that a template be made for a guide when fitting and cutting panels for gables. Any scrap wood or material at least 12″ wide can be utilized to make the guide. Snap into location any scrap piece of panel into the gable starter course. With the 12″ wide scrap material placed against the bottom of the gable, scribe a line onto the scrap panel.

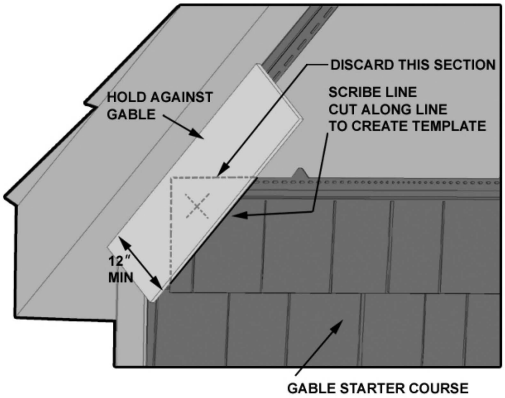

Figure 6.3 Fitting Shanke at Gable

Cut along the line and now you have a gable template. Use the template to cut all gable mating panels remembering to maintain a ¼″ gap for expansion inside all trim channels.

6.4 Trimming fixtures
Fixtures cannot be attached directly to the siding. Always use a block or a J-box to attach fixtures. Drill a hole slightly larger than the diameter of the fasteners, allowing for expansion and contraction. Note that fasteners must penetrate the solid substrate.

7. SCALLOP INSTRUCTIONS FOR GABLE INSTALLATIONS

For a symmetrical appearance on gable walls:
1. Locate the center of the wall prior to beginning installation.

2. Temporarily install the center panel.

3. Temporarily install the left most panel remembering to set the temperature gap (reference section 4.4)

4. Measure and cut your starting panel from the space left between the left most temporary panel and the gable edge.

5. Once starting panel is established, remove the temporary panels and begin laying your first course for this wall (remember to allow a ¼" gap between your first panel section and the corner trim component).

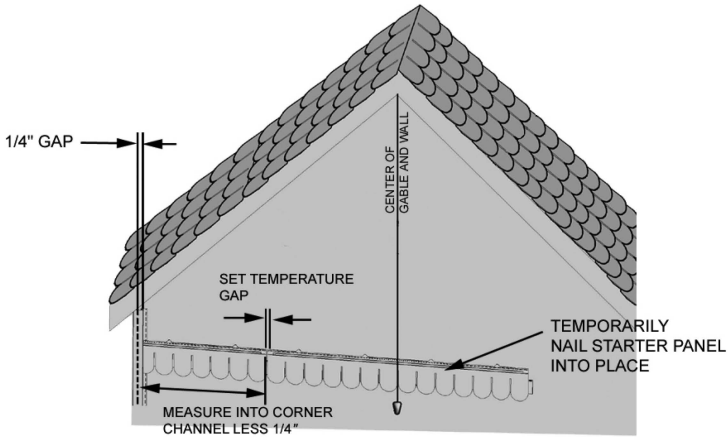

Figure 7 Scallop Installation

8. MITERED CORNER ACCESSORY INSTALLATION

8.1 General
The mittered corner accessory installs best over a solid substrait, 7/16" or better, creating a true, solid corner with nail holding strength. Installation over existing siding is not recommended. It is recommended a water resistant wrap be applied to all corners of the house before installing corner pieces. Make sure the special shake starter strip (Figure 1) extends to within .25" to 1" of the corner. Space the siding panel 3" from the edge of the corner. After the first two courses are installed, lock the first corner over the siding, making sure it also locks into the starter trip. Nail the corner through the top two nail slots. Make sure the corner accessory "floats" on the wall by leaving a 1/16" gap between the fastener head and the panel. Do not flush nail, set or over drive fasteners. Continue installing corner pieces as you move up the wall. When you reach the top panel, cut to length and nail with color-matched finish nails.

Figure 8.1 Special Shake Starter Strip

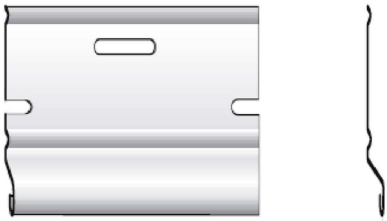

8.2 Installing American Original Mitered Traditional Style Corners
Install the siding on both sides of the wall before you install the corner. Space the siding 3" from the edge of the corner. The corners are designed to fit over the panels. After the first two courses are installed, lock the first corner over the siding, making sure it also locks into the starter strip. The top of the corner must be in line with the top of the panel. Nail the corner through the top two nail slots so that the nail penetrates the nail base7/16" minimum. Toe nailing may be necessary especially when installing over foam and existing siding. Do not over drive the fastener, the corner must "float" and be parallel to the siding.

Figure 8.2 Corner Installation

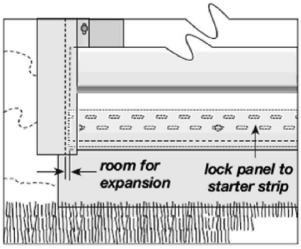

8.3 Installing American Original Mitered Hand-Split Style Corners
Install the siding on both sides of the wall before you install the corner. Space the siding 3" from the edge of the corner. The corners are designed to fit over the panels that are used to start a new course. After the first two courses are installed, lock the first corner over the siding, making sure it also locks into the starter strip. The top of the corner must be inline with the top of the second panel. Nail the corner through the top two nail slots so that the nail penetrates the nail base7/16" minimum. Toe nailing may be necessary especially when installing over foam and existing siding. Do not over drive the fastener, the corner must "float" and be parallel to the siding.

Each side of the corner has a tab at the bottom of the shake with cut marks at 1/8" increments. They allow you to fit the corner to the different butt heights you may encounter as you finish a course. Trim the corner gap as needed to fit the panel.

Figure 8.3 Hand-Split Tab

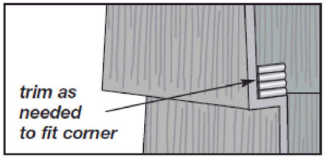

NOTE: Depending upon the area of the Hand-Split panel you finish with and the top completion selected, you may have to install furring behind the top panel in the receiver to accommodate the thickness of the Hand-Split panel.

9. TIPS

Care should be taken to not use the same length starter panel on the same wall. This will minimize the chance of creating a pattern. Cut panels should only be used to start and terminate a course. The minimum panel length should be 16″.

Always start at the lowest point of the structure.

Nailing the panels should not restrict movement. Nails should be driven straight into the center of any nailing slots leaving about 1/16″ between the nail head and the panel. Allow 1/4″ clearance in receiving channels.

To insure panels are hanging straight and level, every 5-6 course stretch a level chalk line across the wall and use as a guide. Alternately, level every strating and finishing piece to make sure the course will be level.

Always store siding panels flat. Never bend siding panels.

Read Installation Instructions thoroughly.

To assure color uniformity, use lot numbers (located on box label) within 60 units of each other.
It is recommended that the entire wall covering be purchased at the same time.

ROCK -TO - LOCK!

WHEN INSTALLING, STARTING THE PANEL LOCK ON THE LEFT SIDE AND ROCKING IT INTO PLACE "ZIPS" THE LOCK AND CAN MAKE INSTALLATION FASTER!

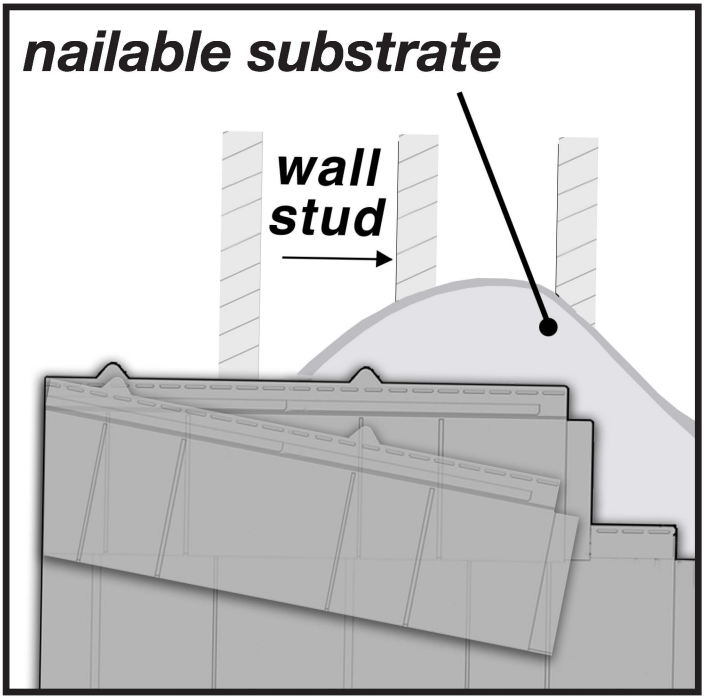

American Original™
BUILDING PRODUCTS LLC

AmericanOriginalSiding.com

© 2008 American Original is a registered trademark.
All rights reserved. Printed in U.S.A.